High Performance Low Cost Off-line PWM Power Switch

General Description

LN2447 is a low cost, highly integrated PWM power switch for non-isolated buck applications.

LN2447 combines a 600V power MOSFET with an ON/OFF PWM controller in one chip. The IC can achieve high precision 12V Output at universal AC input. In LN2447, PWM switching frequency with shuffling is fixed to 60 KHz.

Package

- SOP8

Features

- PWM/PFM automatic switching function
- Built-in 60KHz Oscillator with Frequency Shuffling
- Build in Protections:
  - Over Load Protection (OLP)
  - On-Chip Thermal Shutdown (OTP)
  - Cycle-by-Cycle Current Limiting (OCP)
  - Leading Edge Blanking (LEB)

Applications

- Home appliances

Typical Application Circuit

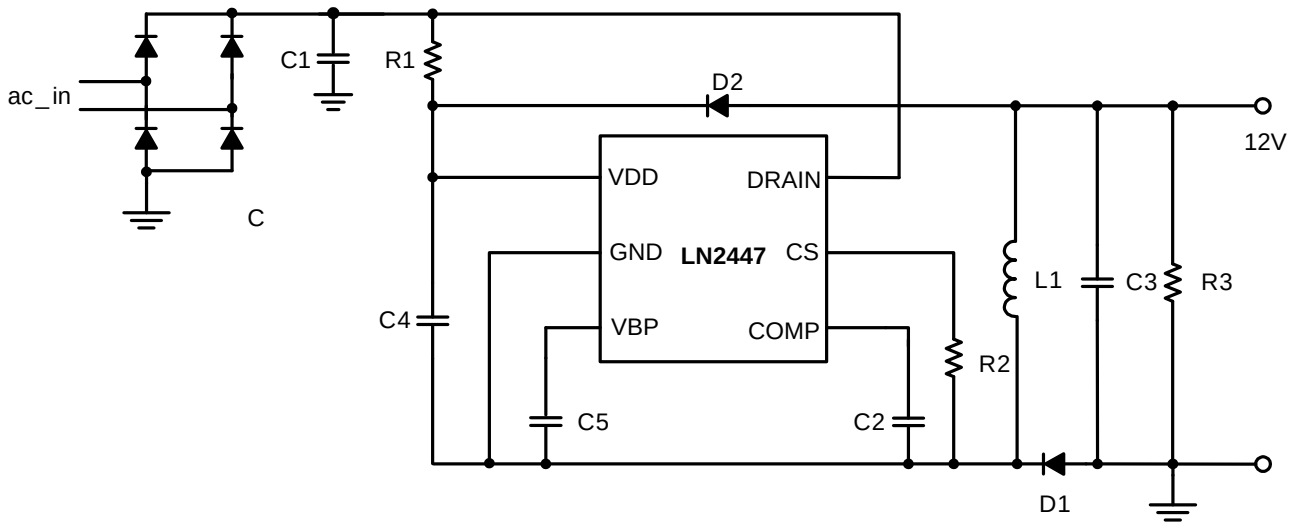

Ordering Information

product name	Description
LN2447P12SRC	SOP8 package with built-in 600V NMOSFET

■ Pin Configuration

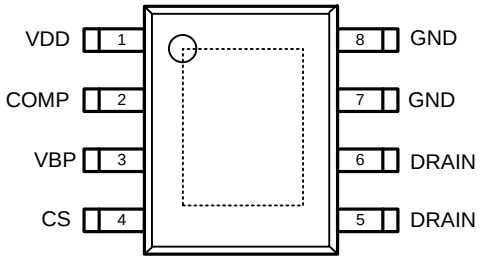

SOP8
(TOP VIEW)

Pin	Foot position	Description
1	VDD	Internal Power Supply
2	COMP	Loop compensation
3	VBP	Power Supply for Driving Power MOSFET
4	CS	Used for Peak Current Control.
5/6	DRAIN	Power Input
7/8	GND	Ground

■ Marking Rule

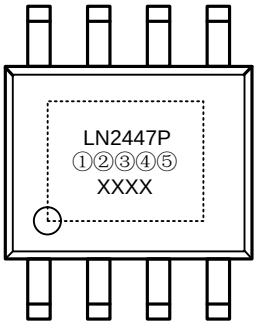

ESOP8
(TOP VIEW)

Label	mark	description
①②	12	VOUT=12V
③④⑤	SRC	600V NMOSFET
XXXX	Quality tracking information codes	

■ Function Block Diagram

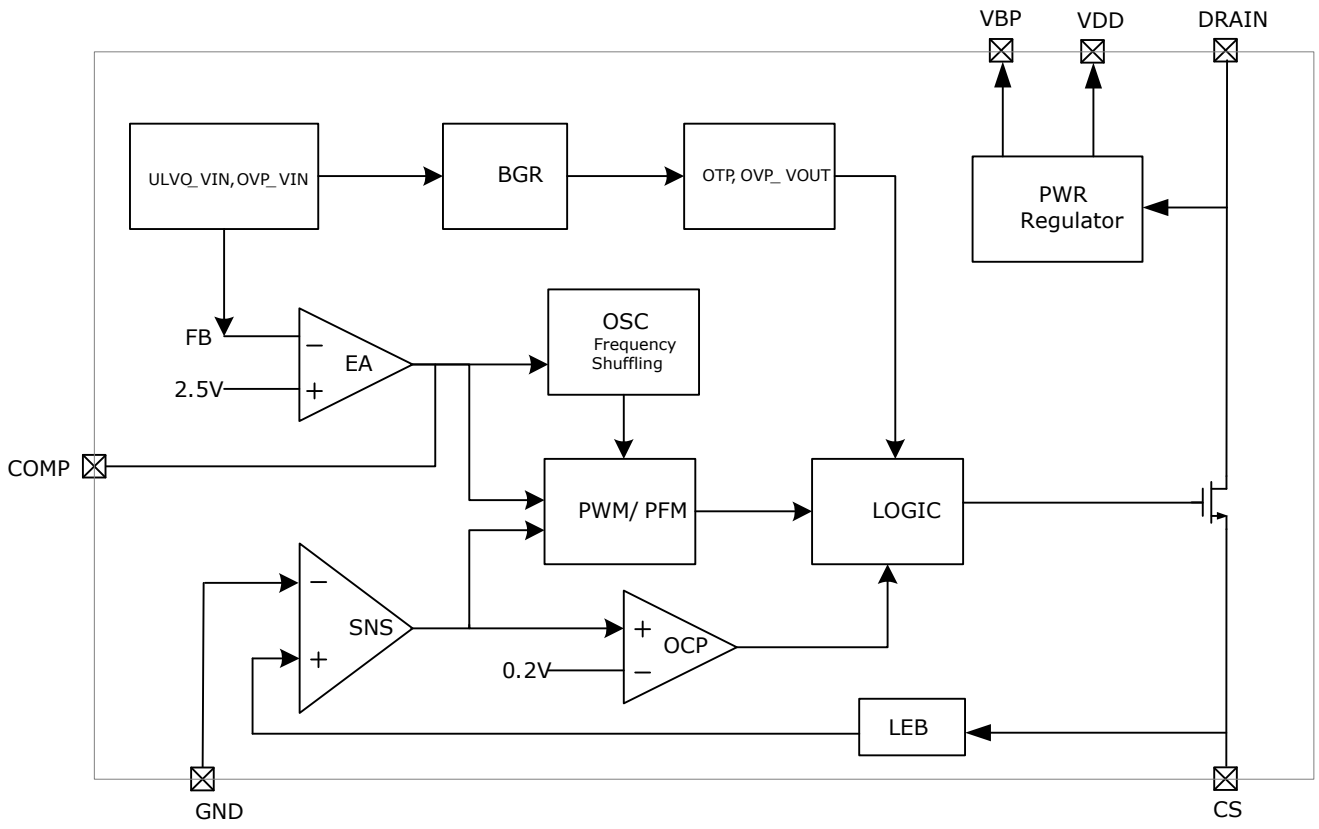

■ Absolute Maximum Ratings

parameter	Maximum	unit
DRAIN Voltage	650	V
VDD, VBP Voltage	-0.3～+14	V
CS, COMP Voltage	-0.3~+7	V
Operating Ambient Temperature	-40~+85	℃
Storage Temperature Range	-40~+125	℃
ESD Capability HBM	4000	V

■ Electrical Characteristics

(VDD =12V, ta=25°C unless otherwise stated)

Parameter	Symbol	Condition	Min	Typ	Max	Unit
Stand-by Current	I_STB	VDD rises to 12V	-	37	-	uA
Active Current	I_ACT	VDD drops to 11V	-	1.2	-	mA
VDD Under Voltage Lockout Enter	UVLO_R	VDD rise	-	13.2	-	V
VDD Under Voltage Lockout Release	UVLO_F	VDD drop	-	7.4	-	V

VDD Voltage	VDD	Load 50mA	12	12.5	13	V
VDD Over Voltage Protection	OVP_VDD	-	-	14	-	V
LEB	T_LEB	-	-	300	-	ns
Minimum On Time	TON_MIN	-	-	600	-	ns
Current Limiting Threshold	VCS_MAX	-	-	400	-	mV
Operation Frequency	F_OSC	-	50	60	70	kHz
Frequency Shuffling Range	△ F_OSC	-	-	±6	-	%
Maximum Duty Cycle	D_MAX	-	-	-	50	%
Error Amplifier Gain	GAIN_DC	-	-	75	-	dB
Error Amplifier Trans-conductance	GM	-	-	60	-	uS
Over Temperature Protection	T_OTP	-	-	150	-	℃
Over Temperature Protection Hysteresis	T_HYS	-	-	20	-	℃
Power MOSFET Leakage Current	I_LEAK	V_DRAIN =600V	-	1	-	uA

■ Typical Performance Characteristics

1, VOUT waveform, AC_IN=220V, IL=5mA

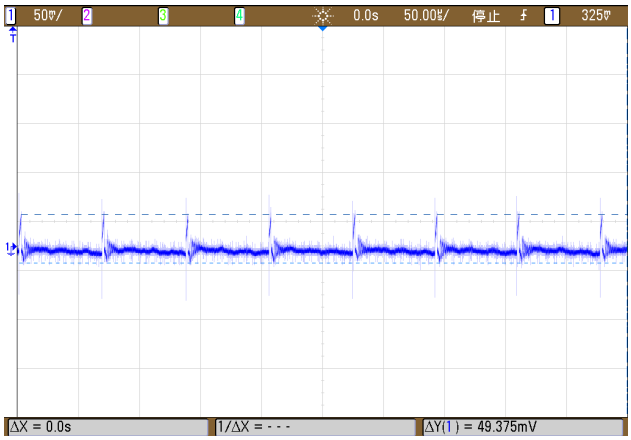

2, VOUT waveform, AC_IN=220V, IL=100mA

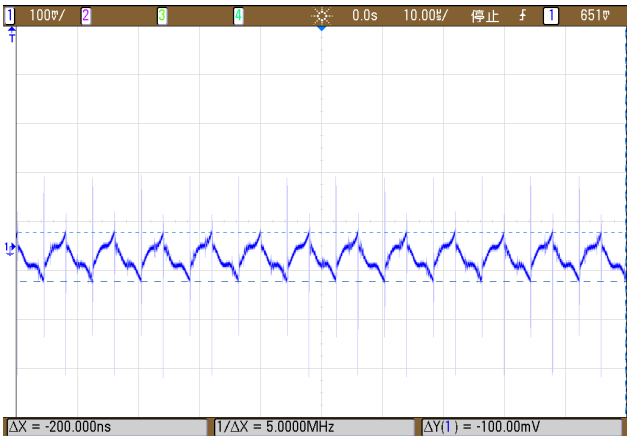

3, Standby Current Temperature Curve

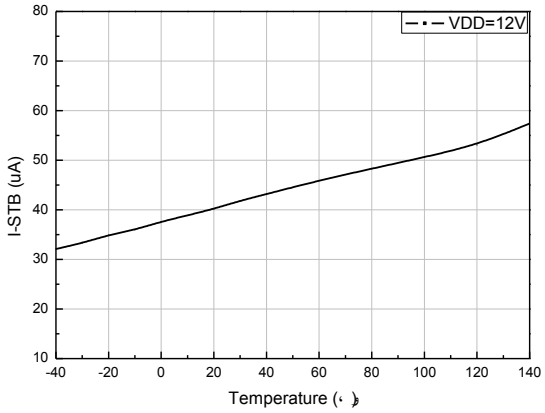

4, UVLO Temperature Curve

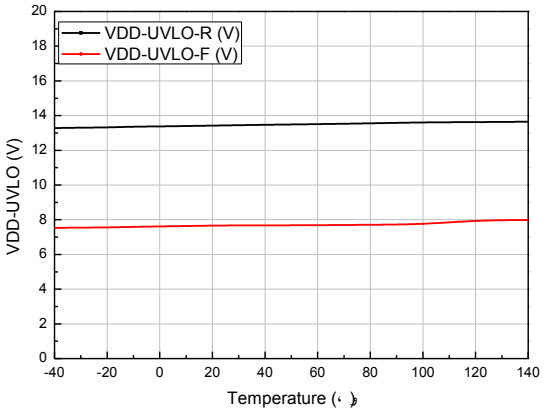

5, Efficiency

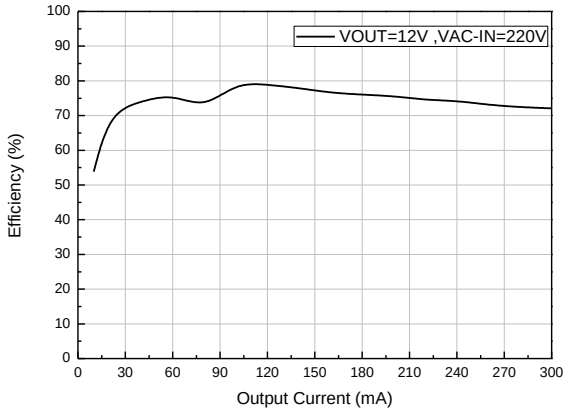

■ Typical Application Circuit

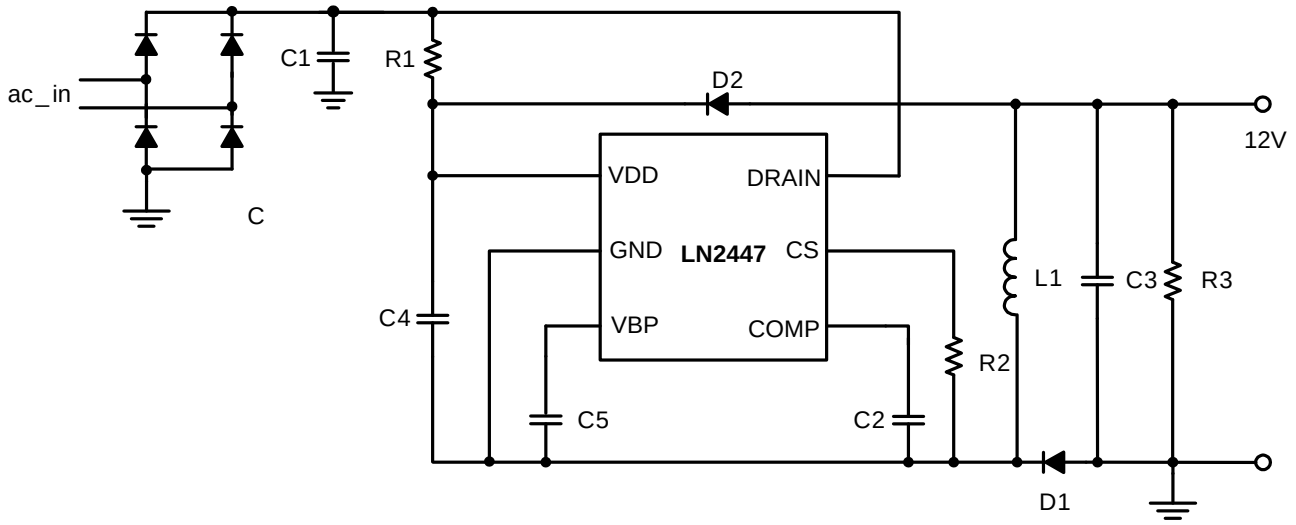

■ Component selection table

element	parameter	element	parameter
R1	1M	C1	4.7uF/400V
R2	1ohm	C2	100nF/16V
R3	2.2K	C3	470uF/25V
D1	ES1G	C4	10uF/25V
D2	1N4007	C5	1uF/25V
L1	1mH		

■ Application Description

LN2447 combines a high voltage power MOSFET switch with power controller in one chip. It is optimized for off-line non-isolated buck applications for small home appliances and linear regulator replacement. The IC utilizes the ON/OFF current mode PWM control to regulate a 12V default output with high precision and lowest components count.

- **Start Up**

Vin powers up and charges C4 through the start resistor R1, When the VDD voltage rises and exceeds UVLO_R, the chip drives the internal power MOSFET to charge the output cap. C3. At the same time VOUT supplies power to VDD through D2, and finally VOUT=VDD and reaches steady state.

R1 is the startup resistor, the starting current IS=(VIN-VDD)/R1, Using the relationship of I_STB<IS<IACT, we can choose the right R1 to ensure startup.VIN_ ac = 220V, the starting resistor R1 is typically 1M.

- **Fake load**

When the load is very light, the system automatically switches to PFM mode to reduce switching losses and improve output efficiency. When the operating frequency is reduced to the lowest frequency of 1k or less, a dummy load is required to maintain the stability of the output.

- **Stability compensation**

The implementation of system stability is achieved by adding compensation components at the comp side.

Typical value C2 = 100 nF.

- **Cs current limit**

The CS terminal resistor is used to implement the over-current protection function, and the maximum inductor current IL_MAX<0.4V/R2.

■ Package Information

- **SOP8**

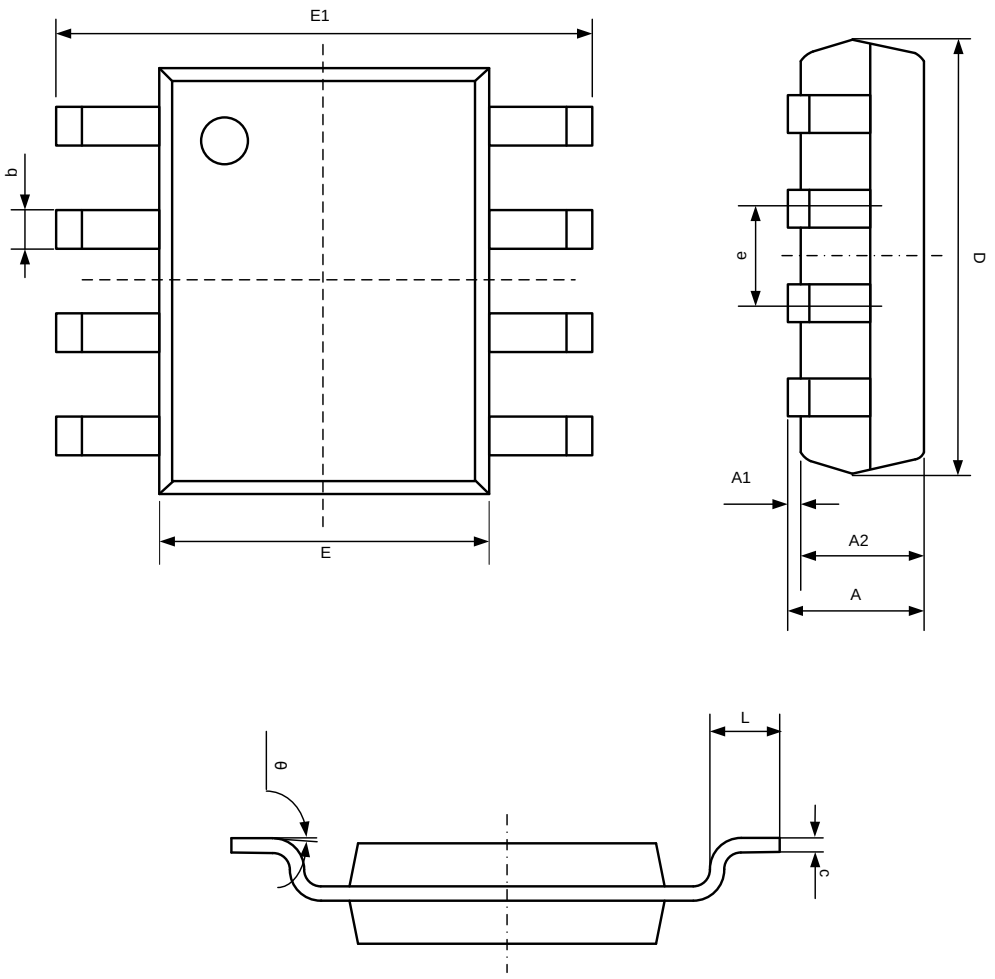

Symbol	Dimensions In Millimeters		Dimensions In Inches	
	Min	Max	Min	Max
A	1.350	1.750	0.053	0.069
A1	0.100	0.250	0.004	0.010
A2	1.350	1.550	0.053	0.061
b	0.330	0.510	0.013	0.020
c	0.170	0.250	0.007	0.010
D	4.700	5.100	0.185	0.200
E	3.800	4.000	0.150	0.157
E1	5.800	6.200	0.228	0.244
e	1.270(BSC)		0.050(BSC)	
L	0.400	1.270	0.016	0.050
θ	0°	8°	0°	8°